TESTS OF THE TIME CONSUMPTION OF THE OPERATIONS PERFORMED AT THE WORKSTATION FOR ASSEMBLING AND DISASSEMBLING ENGINES

Badania czasochłonności czynności wykonywanych na stanowisku pracy do montażu i demontażu silników

Robert CIEŚLAK ORCID: 0000-0002-1320-0410
Paweł SOBCZAK
Krzysztof MAKOWSKI

DOI: 10.15199/160.2021.2.4

Abstract: The paper includes the description of the tests on the time consumption of the operations performed at the workstation for assembling and disassembling bus engines. The paper presents the method called ChronFoto_RC which was used to analyse the workstation. Then, the authors proposed to improve the workstation with a specially designed mobile scissor lift. The summary presents the assessment of this solution.
Keywords: time consumption, assembling, disassembling

Streszczenie: W artykule zawarto opis badań czasochłonności operacji wykonywanych na stanowisku pracy przy montażu i demontażu silników autobusowych. Przedstawiono metodę ChronFoto_RC, która została wykorzystana do analizy stanowiska pracy. Następnie autorzy zaproponowali usprawnienie stanowiska pracy za pomocą specjalnie zaprojektowanego mobilnego podnośnika nożycowego. W podsumowaniu przedstawiono ocenę tego rozwiązania.
Słowa kluczowe: czasochłonność, montaż, demontaż

Introduction

The assembly technological process is the final stage of the production process during which the elements are joined according to a series of logically planned actions in such a way that the assembly units and the final product can meet specific technical requirements proposed by the construction engineer.

One of the main tasks performed during the design of the assembly technological process is to determine the correct sequence of operations as well as their duration time. Faced with strong market competition, an increasing number of types, variants and an increasing complexity of products, a modern assembly company requires continuous improvement of both the organization and technological flexibility of systems, especially the automated, robotic and hybrid ones [3, 6].

Measuring the working time of humans in assembly processes is used to:

– determine the actual workflow and the manner in which the work is completed,
– identify losses resulting from the method used (determining production reserves),
– establish rational ways and methods of working as well as the necessary time of work completion [7, 8, 10].

Measuring the working time also belongs to the elements of economical business management. In order to plan, manage and control the workflow, which are the essential activities for implementing a given production programme, it is necessary to precisely calculate the duration time of work completion. This calculation is essential, especially when the duration time is managed consciously. Out of concern for the worker, it is made sure that workers performing their work in assembly departments are able to do it without a significant effort. The usefulness of testing the working time also results from the fact that the economical efficiency of the business (reducing production costs to the minimum) is possible when the workflow at individual workstations is organized in a rational manner.

The aim of testing the working time

One of the key factors for improving the work organization is the technical standardization of work, that is, determining its optimal workload for the performance of a given work task in specific organizational and technical conditions [5].

In modern industry, proper and systematic research into work is an integral part of managing technical, technological, organizational and economic progress and is part of the system of activities aimed at continuous increase in work efficiency [1].

The aim of the test performed at the workstation for assembling and disassembling bus engines in the repair shop of the Municipal Transport Company is to determine the actual duration of the operation at a normal pace of

work and to determine the efficiency of the worker (taking into account working times and breaks). In order to improve the conditions and reduce the duration time of assembling and disassembling bus drive units, a model of a mobile scissor lift was presented.

Methodology of testing the time consumption of operation by means of the ChronFoto_RC method

The tests carried out within industrial practice encouraged the authors to try to develop a method of testing the time consumption of assembling. The method is based on the combination of chronometric analysis modules and working-day activity study (working-day photo). The combination of these two modules resulted in the development of the ChronFoto_RC program, equipped with a simple operation menu, that can be installed on almost any computer.

It was assumed that the suggested method of testing the time consumption of technological assembly processes should:

– accurately record working times and rest periods, i.e. the pace of technological operations,
– assign different types of times to individual elements of the operation (chronometric analysis module),
– take into account the possibility of calculating the coefficient (the so-called percentage surplus of supplementary time) in the working time standard for the assembly operation (working day photo module).

The criteria to assess the effectiveness of this method, allowing to obtain satisfactory results quickly and easily, include:

– accuracy of time consumption measurements,
– short duration time (costs) of taking measurements,
– the ability to analyse measurements of the time consumption of complex activities (operations).

The most important steps in the application of the ChronFoto_RC method are as follows: defining the aim and subject matter of the test, determining the necessary number of measurements; dividing the tested activity into its elements; carrying out measurements; performing a chronometric sequence analysis which involves the rejection of values significantly different from the average by means of the so-called coefficient of chronometric sequence content; assigning types of working time to sections of the operation (process); selecting and adding time consumption categorised by type; compiling the sums of the types of time consumption; evaluation of worker productivity and compiling the sums of the types of time consumption in the form of a graph [2].

Description and characteristics of the workstation for assembling and disassembling bus engines

The assembling and disassembling process in the repair shop of the Municipal Transport Company is performed when:

– the bus is intended for scrapping,
– the engine has broken down and it is impossible to repair the failure without removing the engine,
– the engine had a complete failure, preventing its further operation.

The measurement of the working time during the assembly of the bus engine involved the following activities:

– collecting data on activities performed by workers while assembling selected engines; measuring the working time of assembling the engine included one team of mechanics who performed their work in a closed hall (it had two repair lines) (Fig. 1),
– dividing the analysed activity into elements; the assembly operations performed while the engine was being assembled are presented later in the article,
– determining the testing method and the scope of the activity being tested; it was agreed with the manager of the repair shop that the new method, ChroFnoto_RC, would be used for the measurement of the working time,
– establishing boundary points; the boundary points are understood as distinct and easily noticeable moments when individual elements of the procedure start and finish; as a general rule, the same point is both the end of the previous element and the start of the next one,
– setting the time and date of the measurements; the time and date of the measurements were agreed with the manager of the repair shop; the measurements were taken from 06:00 to 14:00,
– carrying out measurements; it was agreed with the manager of the repair shop that the time of individual activities would be measured with stopwatches (with an accuracy of one second); at the same time, the results of the measurements will be transferred to the forms prepared in advance,
– compiling observation results and performing their analysis; after the measurements, the results of the observations were shown to the manager of the repair shop.

Fig. 1. Workstation for assembling and disassembling engines

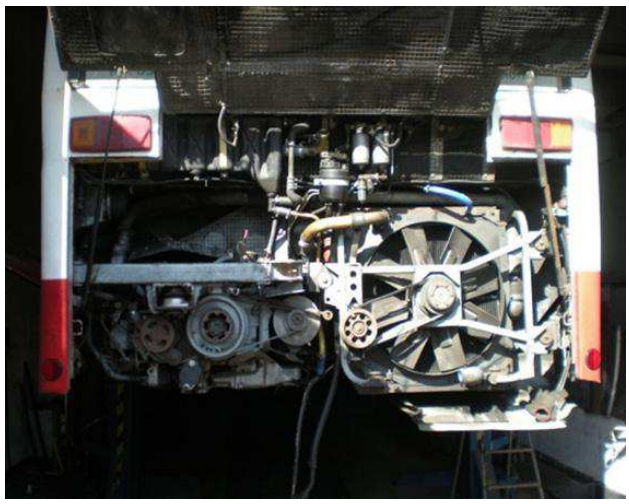

Fig. 2. Mounting the engine to its compartment inside the bus

Detailed assembly operations for the bus engine are presented below (Fig. 2), (the authors' own idea on the basis of the data obtained in the tests):

- assembling the engine, mounting the clutch,
- mounting the gearbox to the engine,
- mounting the engine to the compartment,
- mounting the drive shaft,
- assembling the exhaust system,
- making the electrical connections for the alternator, automatic gearbox, sensors,
- connecting the water pump and cooling system pipes,
- connecting the diesel fuel supply system,
- connecting pneumatic system hoses, air supply turbine,
- replenishing the fluid in cooling system of the engine and gearbox,
- mounting the rear beam (bumper).

The ChronFoto_RC method was used to measure the working time during the assembly of the bus engine and the obtained data was recorded on:

- measurement sheet ZE 2 (Fig. 3) and (Fig. 6),
- the appendix (Fg. 4),
- diagram (Fig.5).

Measurement Sheet ZE2 (Fig.3) contains a list of assembly operations, as well as the results of individual measurements of the technological assembly process. The ChronFoto_RC program was used to calculate the value of unit times tj, i.e. the production rate L, the

ZE2

New Edition Save Print Summary End

Nr	assembly operations	reference worker count	influencing factors	Zy	1	2	3	4	5	6	7	8	9	10	Σ / ū	t [min.]
1	assembling the engine, mounting the clutch	1	distance, weight	L	100.00	100.00	100.00	100.00							100.00	241,67
				ti	241.22	241.89	242.02	241.55								
				F	241.22	866.06	1493.93	2120.13							241.67	
2	mounting the gearbox to the engine	1	distance, weight	L	100.00	100.00	100.00	100.00							100.00	24,30
				ti	24.22	24.57	23.89	24.52								
				F	265.44	890.63	1517.82	2144.65							24.30	
3	mounting the engine to the compartment	1	distance, weight	L	100.00	100.00	100.00	100.00							100.00	41,25
				ti	40.89	41.22	41.05	41.82								
				F	306.33	931.85	1558.87	2186.47							41.25	
4	mounting the drive shaft	1	distance, weight	L	100.00	100.00	100.00	100.00							100.00	25,34
				ti	25.88	25.38	24.89	25.22								
				F	332.21	957.23	1583.76	2211.69							25.34	
5	assembling the exhaust system	1	distance, weight	L	100.00	100.00	100.00	100.00							100.00	64,59
				ti	64.44	64.84	64.02	65.05								
				F	396.65	1022.07	1647.78	2276.74							64.59	
6	making the electrical connections for the alternator, automatic gearbox, sensors	1	distance, weight	L	100.00	100.00	100.00	100.00							100.00	45,09
				ti	45.02	44.86	45.52	44.95								
				F	441.67	1066.93	1693.30	2321.69							45.09	
7	connecting the water pump and cooling system pipes	1	distance, weight	L	100.00	100.00	100.00	100.00							100.00	35,46
				ti	35.35	35.88	35.62	34.98								
				F	477.02	1102.81	1728.92	2356.67							35.46	
8	connecting the diesel fuel supply system	1	distance, weight	L	100.00	100.00	100.00	100.00							100.00	50,18
				ti	50.33	50.56	49.98	49.85								
				F	527.35	1153.37	1778.90	2406.52							50.18	
9	connecting pneumatic system hoses, air supply turbine	1	distance, weight	L	100.00	100.00	100.00	100.00							100.00	48,78
				ti	48.25	48.88	49.98	48.02								
				F	575.60	1202.25	1828.88	2454.54							48.78	
10	replenishing the fluid in the cooling system of the engine and gearbox	1	distance	L	100.00	100.00	100.00	100.00							100.00	36,78
				ti	36.55	36.88	36.85	36.82								
				F	612.15	1239.13	1865.73	2491.36							36.78	
11	mounting the rear beam	1	distance	L	100.00	100.00	100.00	100.00							100.00	12,55
				ti	12.02	12.78	12.85	12.55								
				F	624.17	1251.91	1878.58	2503.91							12.55	
n = 4		k = 1	sum of times in cycle tz		624.17	627.74	626.67	625.33							2503.91	suma t 625,98
Tz sr = 625.98			Distraction Rz		3,57										suma Rz	
Rz sr = 3.57			z = (Rz sr / tz sr)* 100% = 0,57							e = 1%			e' = 5%			

Fig. 3. View of the measurement sheet ZE2 for assembling the bus engine

Addition

New Chart Print End

Nr	assembly operations	t	types of working time [min.]							
			G	Vsk	Vsv	Vp	Er	N	F	
1	assembling the engine, mounting the clutch	241,67	241,67							
2	mounting the gearbox to the engine	24,30	24,30							
3	mounting the engine to the compartment	41,25	41,25							
4	mounting the drive shaft	25,34	25,34							
5	assembling the exhaust system	64,59	64,59							
6	making the electrical connections for the alternator	45,09	45,09							AZ
7	connecting the water pump	35,46	35,46							
8	connecting the diesel fuel supply system	50,18	50,18							
9	connecting pneumatic system	48,78	48,78							
10	replenishing the fluid in the cooling system	36,78	36,78							
11	mounting the rear beam	12,55	12,55							
12	intervals in the course of work (rest breaks)	15,12		15,12						
13	intervals in the course of work (work-related conversations)	14,24			14,24					
Sum			625,99	15,12	14,24	0	0	0	0	655,35

Fig. 4. View of the Appendix sheet for assembling the bus engine [2]

sum of unit times per cycle tz, the range Rz and the coefficient of dispersion z. On basis of the data given above, the setpoint value ε` was determined by means of the nomogram. Then, on the sheet "Appendix" (Fig. 4), individual types of time were assigned to the sections of the tested technological assembly process.

In the next stage of the technological assembly process (Fig. 5), the surplus percentage of the time and worker productivity were calculated and the percentage shares of individual types of time for one shift were presented graphically. The following parameter symbols G, Vsk, Vsv, Vp, Er, N and F were adopted on the basis of REFA [8, 9]

The performed measurements show that the productivity of workers in the repair shop is 95.52%. This result should be considered satisfactory.

Chart

Z2 Print End

$Z_{sk} = \frac{V_{sk}}{G_{max}} * 100\% = \frac{V_{sk}}{AZ - (V + Er)} * 100\%$	2,31
$Z_{sv} = \frac{V_{sv}}{G} * 100\%$	2,27
$Z_p = \frac{V_p}{G_{max}} * 100\% = \frac{V_p}{AZ - (V + Er)} * 100\%$	0,00
$Z_v = Z_{sk} + Z_{sv} + Z_p$	4,59

worker productivity % =	95,52

G	Vsk	Vsv	Vp	Er	N	F
625,99	15,12	14,24	0	0	0	0

Fig. 5. View of the chart sheet for assembling the bus engine [2] ((V_{sk} – material, fixed supplementary time, V_{sv} – material, variable supplementary time, V_P – personal supplementary time, G – main time, Z_{sk}, Z_{sv} and Z_p – percentage surcharges of supplementary time)

Z2

Print End

Z2	time consumption calculation sheet - ChronFoto_RC method	reference number page

work task assembly MAN			
Order Number:	**Count:**	**Department:**	**MPK:**
Date: 08.02.2021 r.	**Start time:** 6:00 **Count:** 1	**Finish time:** 14:00 **Count:** 1	**Duration time:** 8h

Types of working time	
main time	625.98
rest time	0.00
supplementary time	62.60
other time additions	0.00
unit time	688.58
target time	0.00
preparation-completion time	0.00

Technology and methods of work

Bus engine assembly

Subject matter of work	Designation	Material	Initial State	Figure Number	Material Number	Dimensions, shape, weight
	engine	GG12	good	1	1	

Worker	Name	Personal Number	m	f	age	Period of performing similar tasks	Period of performing the tested task
	Swobodny	15	X		52	27 years	

means of production	Designation, type	Count	Number	Year	Technical date, state of means of production
	Toolbox	1			
	Assembly workbench	1			

Comments:

Compiled:	Checked:	Date:	Important:

Fig. 6. View of the sheet Z2 for assembling the bus engine [2]

The proposal for the improvement of the assembly workstation for bus engines

In order to improve the assembling and disassembling of bus engines, a model of a mobile scissor lift was designed (Fig. 7), which replaces the currently used forklift.

The frame to which the scissor lift unit is attached has been designed as a welded structure using c-profiles (C-channels). An electrically controlled hydraulic cylinder that allows the scissor lift to rise as well as the wheels of the trolley bolted to the frame were selected from the catalogues [4].

For the analysis of the lift itself, the engine weight was assumed to be 750 kg, whereas for the calculation of the trolley structure, the weight was assumed to be 1000 kg

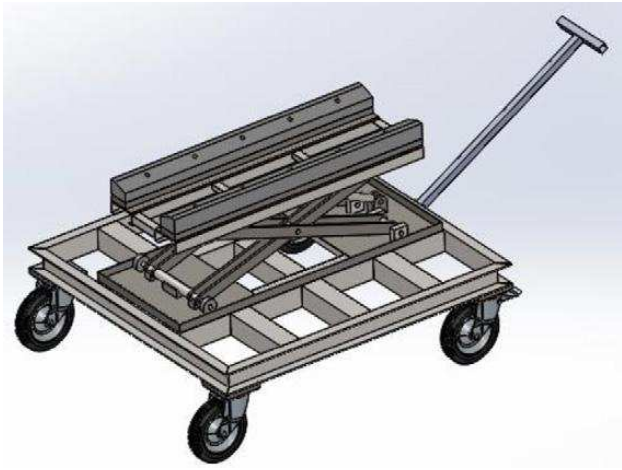

Fig. 7. The model of the scissor lift

(where 250 kg is the weight of the lift and 750 kg is the weight of the bus engine). For the calculations for the output stroke of the hydraulic cylinder, the weight was assumed to be 2000 kg, and for its lowering, 1200 kg. The minimum height of the lift is 360 mm, the maximum – 550 mm; the height of the trolley – 437.8 mm, the trolley with a lift – 797.8 mm (minimum height), 987.8 mm (maximum height).

Below there are the results of the strength analysis performed in the SolidWorks program (Fig. 8 – 13):

The maximum nodal stresses of the lift do not exceed 175 MPa at the connection of the sleeve and the guide (Fig. 8)

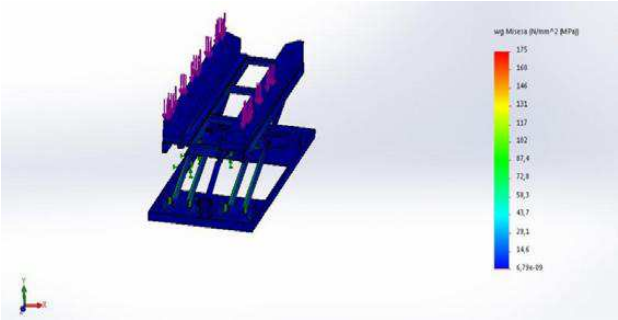

Fig. 8. Nodal stresses of the lift

The maximum value of the static deformation of the lift is 0.000635 (Fig. 9).

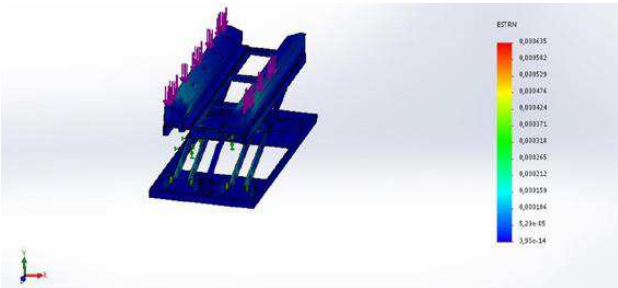

Fig. 9. Static deformations of the lift

The maximum value of the lift structure displacement under the load is 9.78 mm (Fig. 10).

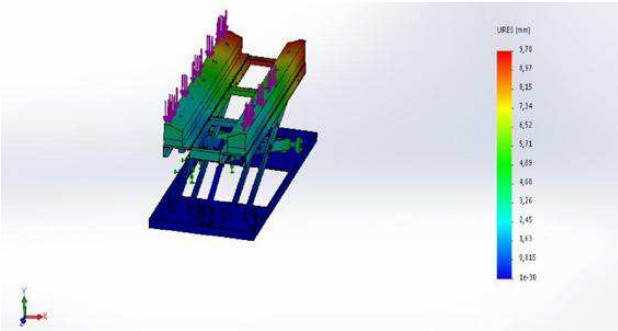

Fig. 10. Static displacement of the lift structure

As for the static analysis of the lift structure frame, the maximum nodal stress is 67 MPa (Fig. 11).

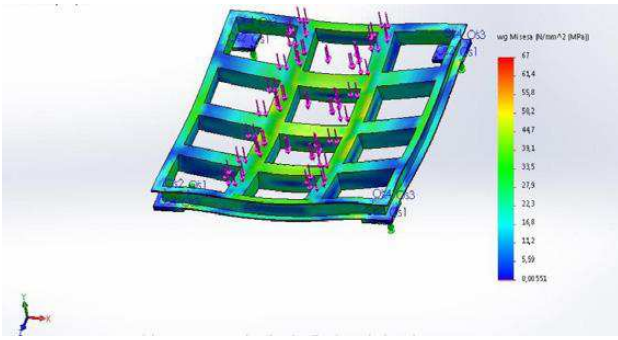

Fig. 11. Nodal stresses of the trolley structure frame

The maximum value of the static deformation of the trolley structure is 0.000225 (Fig. 12).

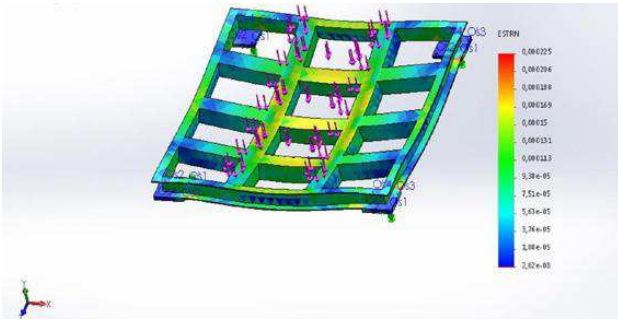

Fig. 12. Static displacement of the trolley structure

The maximum displacement of the frame of the lift frame structure (Fig. 13) under load is 1.11 mm and it is most visible in the centre of the frame.

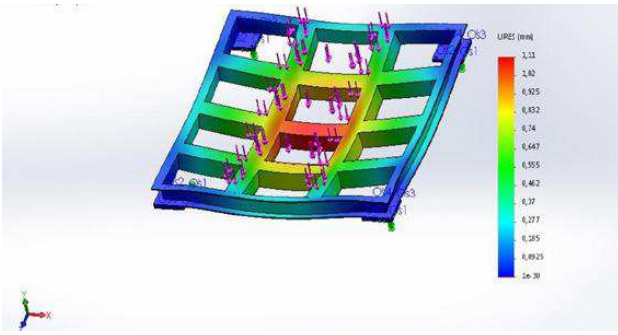

Fig. 13. Static displacement of the trolley structure frame

The main objectives of the designed trolley for assembling and disassembling bus engines primarily include:

– an increase in productivity and, at the same time, a reduction of production costs,
– a more effective use of the available working time,
– stabilization and regularity of the assembling / disassembling process, enabling a more accurate productivity planning,

– an improvement of the organization and working conditions.

Summary

The workstations for disassembling accessory-equipped engines found in city transport buses require precise and safe repair operations. The efficiency of this process and the number of people involved in it are equally important.

In the repair shop of the Municipal Transport Company, the process of replacing the accessory-equipped engine is currently performed by means of a forklift truck. This process lacks sufficient precision and therefore requires a greater number of auxiliary procedures. The ability to precisely position the engine during the replacement is lower.

The presented model of a mobile scissor lift will enable efficient and safe assembling and disassembling of bus drive units. Significant advantages offered by the proposed device include the ability to lift the engine of a considerable weight and of asymmetrically located centre of gravity as well as the ability to adjust the height in a considerably smooth manner.

References

[1] Błaszczykiewicz M., Tybor I., Woźniakowski M. 1968. Zasady technicznego normowania pracy w przemyśle lekkim. Warszawa: Wydawnictwo Przemysłu Lekkiego i Spożywczego.

[2] Cieślak R. 2011. Ocena metod badania czasu pracy w procesach technologicznych montażu, praca doktorska. Poznań: Politechnika Poznańska.

[3] Ciszak O., Żurek J. 2008. „Badanie wydajności gniazda montażu wrzeciennika głównego centrum tokarskiego". Archiwum Technologii Maszyn i Automatyzacji 284:99–105.

[4] Katalog kół: https://www.blickle.pl/produkt/L-RD-282R-42580, https://www.blickle.pl/produkt/L-RD-282R-ST-50658,
katalog siłownika: https://www.bipromasz.pl/wp-content/uploads/2014/11/CBL.pdf

[5] Kurek S., Lach J., Pronobis L., Grzeszczuk A. 1984. Metodyka Technicznego normowania pracy. Częstochowa: SPPW „UDZIAŁOWA".

[6] Prabhu, Girish V., Martin G. Helander and Valerie Shalin. 1995. "Effect of Product Structure on Manual Assembly Performance". The International journal of Human Factors in Manufacturing 5(2: 151.

[7] Prasołek Ł. 2019. Dokumentacja czasu pracy. Wyliczenia, obliczenia, przykłady i wzory, Warszawa: Wydawnictwo C.H. Beck,

[8] REFA. 1984. Metody badania prac cz. 1 i cz. 2. Cieszyn: Cieszyńska Drukarnia Wydawnicza.

[9] Materiały szkoleniowe REFA.

[10] Wołk R. 2013. Normowanie pracy – metody. Sulejówek: Wiedza i Praktyka.

dr inż. Robert Cieślak
Państwowa Wyższa Szkoła Zawodowa w Koninie
ul. kard. S. Wyszyńskiego 35
62-510 Konin
e-mail: robert.cieslak@konin.edu.pl

dr Paweł Sobczak
Państwowa Wyższa Szkoła Zawodowa w Koninie
ul. kard. S. Wyszyńskiego 35
62-510 Konin
e-mail: pawel.sobczak@konin.edu.pl

Krzysztof Makowski
Państwowa Wyższa Szkoła Zawodowa w Koninie
ul. kard. S. Wyszyńskiego 35
62-510 Konin

Zapraszamy Autorów do współpracy!
www.sigma-not.pl
tiam@sigma-not.pl